ULTRALIGHT

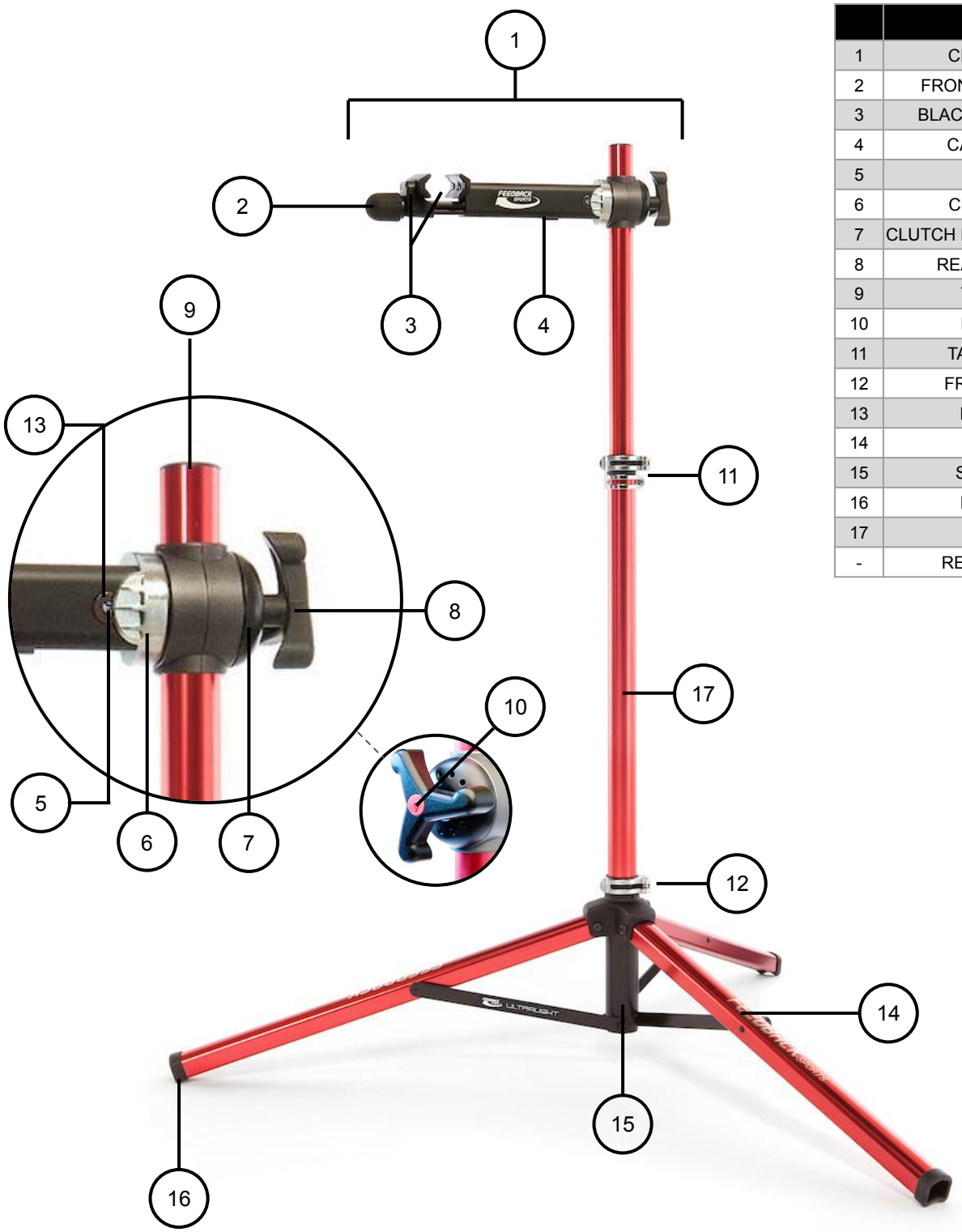

	ITEM	PART #
1	CLAMP HEAD	14741
2	FRONT HAND KNOB	17918
3	BLACK CLAMP JAWS	15414
4	CAM POCKET	15549
5	ROLL PIN	17890
6	CLUTCH CUP	15922
7	CLUTCH BODY DUST COVER	17919
8	REAR TRI-KNOB	15931
9	TOP PLUG	17908
10	DUST CAP	17913
11	TALL COLLAR	16709
12	FREE COLLAR	16708
13	HINGE PIN	17802
14	LEG KIT	16552
15	STOP TUBE	13751
16	FOOT CAP	17891
17	TRIPOD	17795
-	REPAIR STAND	16415

FEEDBACK AND THE FEEDBACK SPORTS LOGO ARE REGISTERED TRADEMARKS OF FEEDBACK SPORTS LLC